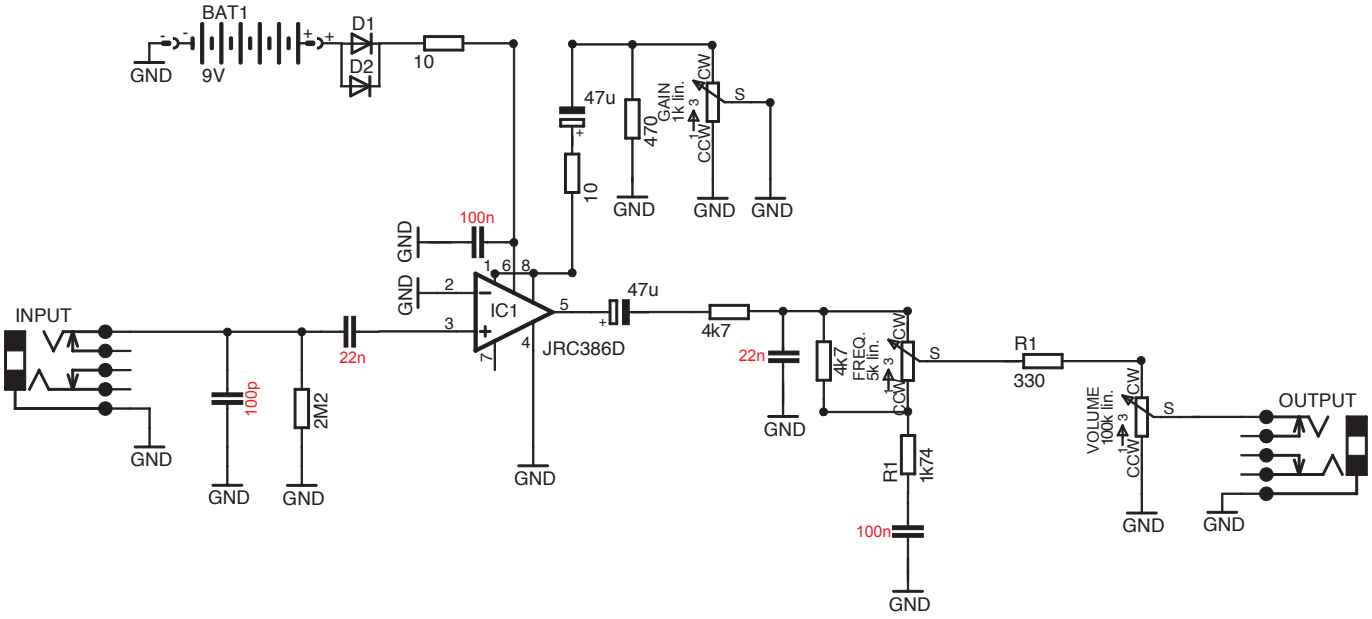

Notes:
-values in red are unknowen,
given values are guesses.
-protection diodes are unknowen,
any type should work fine.
-relay switching is not showen.

Lovepedal Purple Plexi 800

TITLE:LOVEPEDAL_PURPLE_PLEXI_800

Document Number:

REV: 1.0

Date: 05.10.2008 15:19:21

Sheet: 1/1