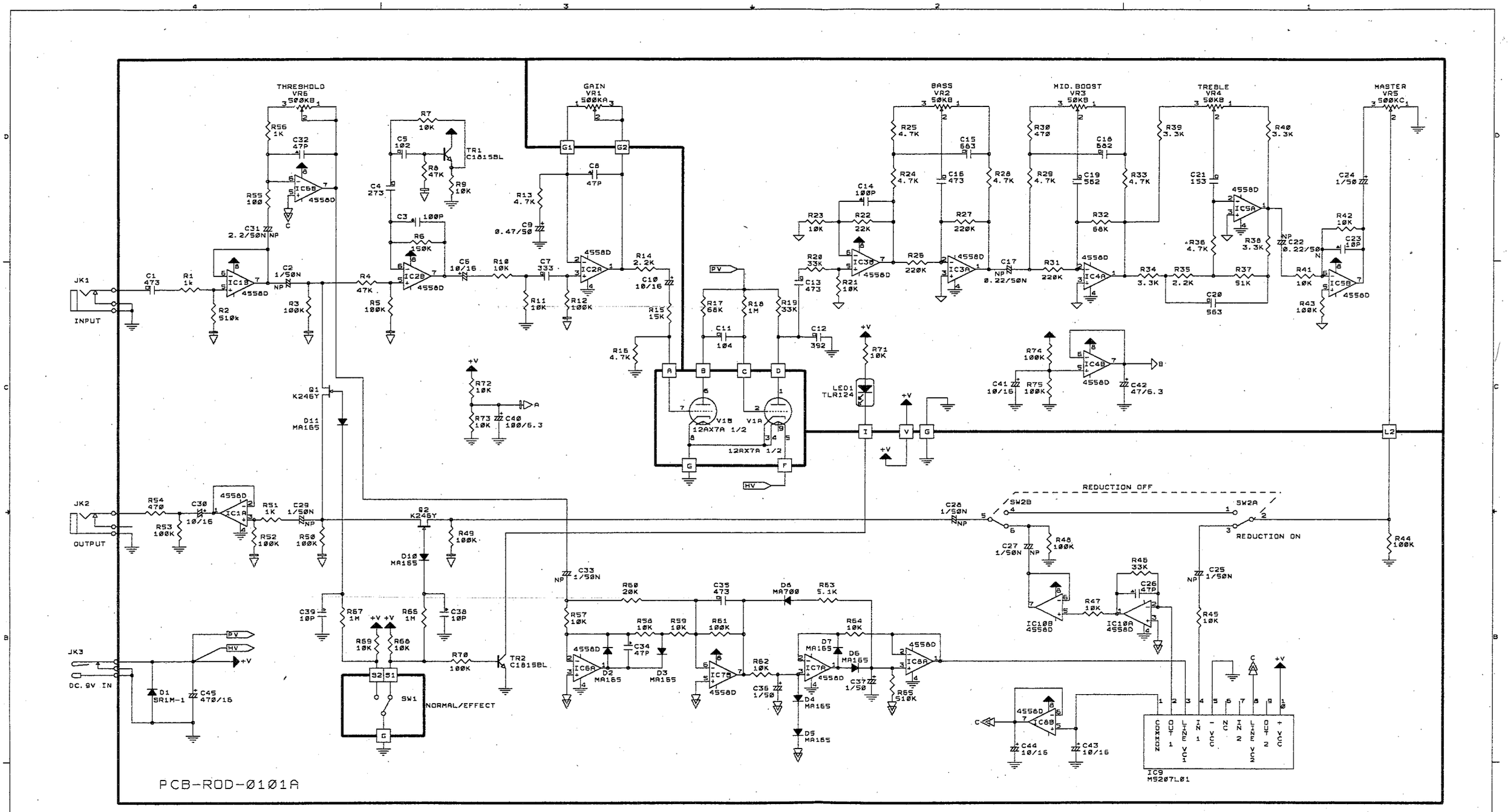

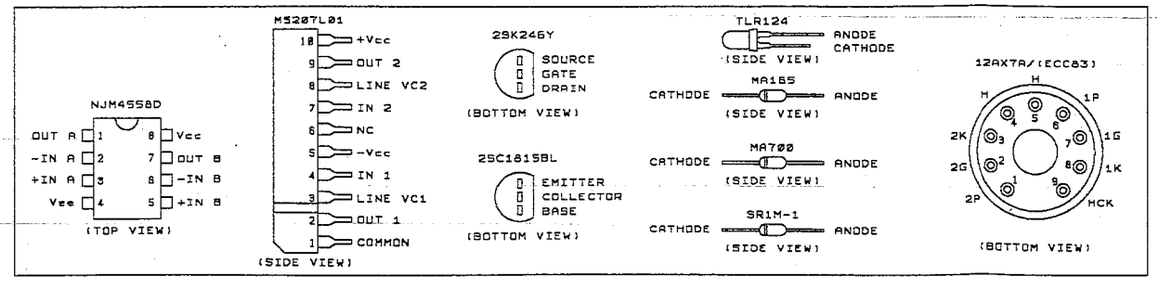

== CAUTION ==

This schematic diagram is a normal standard one. The parts rating and/or schematic diagram will be subject to change without notice.

== NOTES ==

▲ : CERAMIC capacitor.
All ceramic capacitors are above 25V rating.
■ : FILM capacitor.
All film capacitors are above 50V rating.
NP : NON POLAR capacitor.
T : TANTALUM capacitor.
And all capacitors are ELECTROLYTIC capacitors unles otherwise marked.
Unles otherwise indicated :
Resistance in Ω,K=KΩ,M=MΩ.
Resistors. 1/6W +/-5% rating.
Capacitance in uF/V(ELECTROLYTIC,NP,T), P=PF.

TK-999
TUBE KING

Ibanez	
TK999 TUBE KING	
Title	TK999 SCHEMATIC DIAGRAM
Size A2	Document Number 00000 — REV 2
Date: April 25, 1994	Sheet of