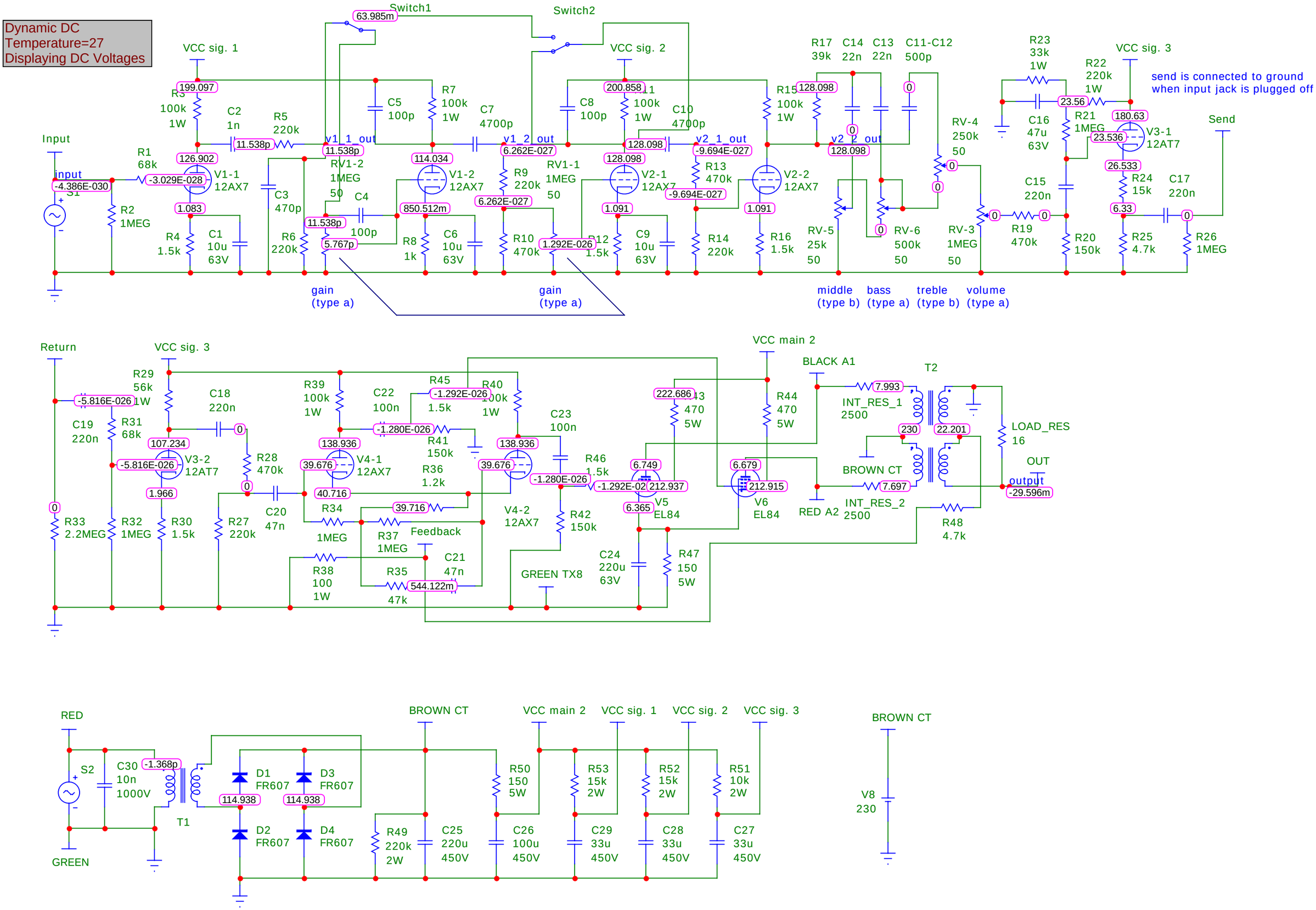
Dynamic DC
Temperature=27
Displaying DC Voltages
Switch1
Switch2
VCC sig. 1
VCC sig. 2
VCC sig. 3
send is connected to ground
when input jack is plugged off
Input
Send
Return
VCC main 2
BLACK A1
RED A2
BROWN CT
GREEN TX8
OUT
output
LOAD_RES
16
INT_RES_1
INT_RES_2
T2
V1-1
12AX7
V1-2
12AX7
V2-1
12AX7
V2-2
12AX7
V3-1
12AT7
V3-2
12AT7
V4-1
12AX7
V4-2
12AX7
V5
EL84
V6
EL84
gain
(type a)
gain
(type a)
middle
(type b)
bass
(type a)
treble
(type b)
volume
(type a)
Feedback
RED
GREEN
S2
C30
10n
1000V
T1
D1
FR607
D2
FR607
D3
FR607
D4
FR607
BROWN CT
VCC main 2
VCC sig. 1
VCC sig. 2
VCC sig. 3
V8
230