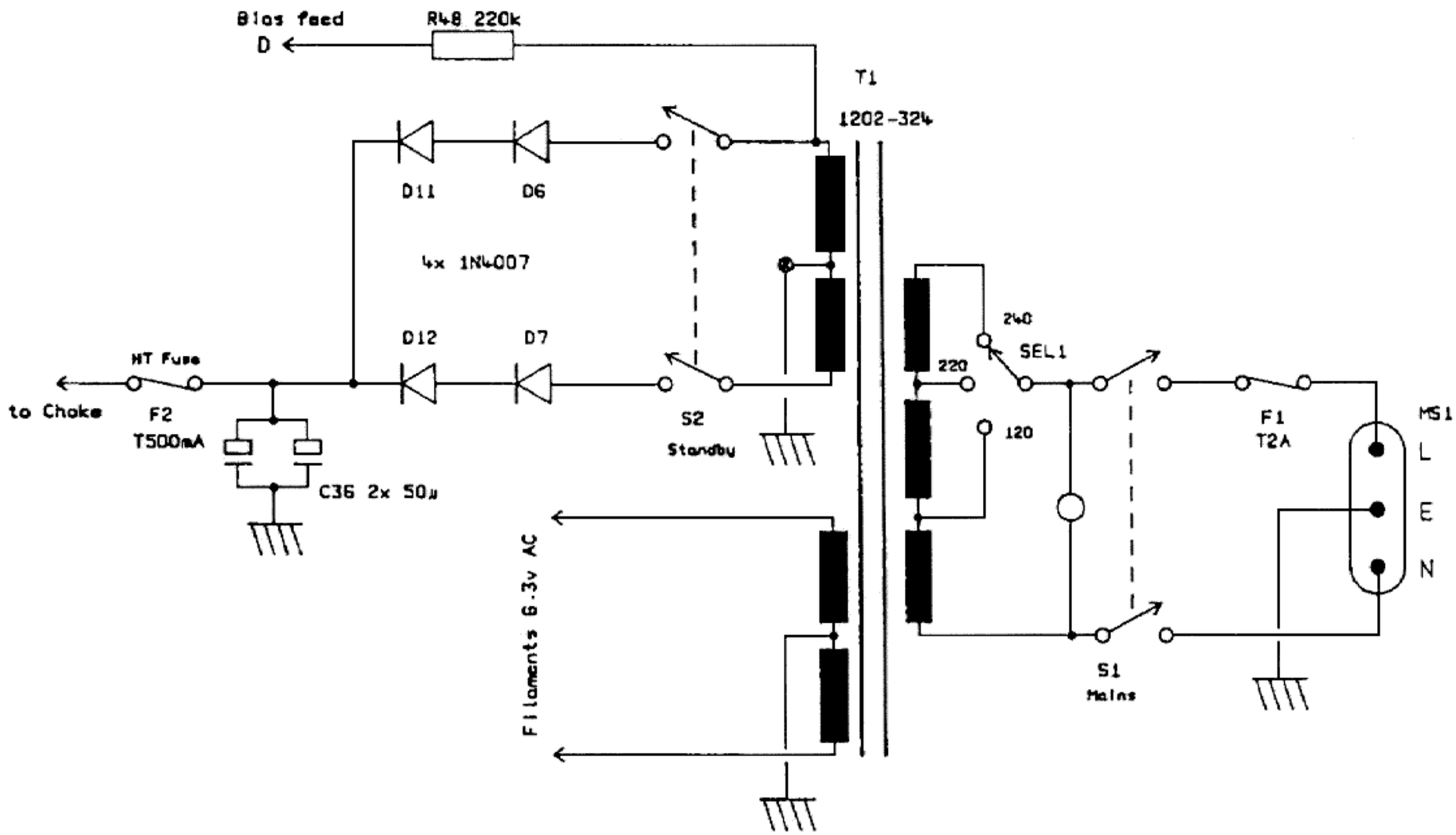

NOTES

2	6-6-88	CPV
ISS.	DATE	DRN.

2550 PSU STD

MARSHALL

JIM MARSHALL PRODUCTS LTD.
BLETCHLEY
MILTON KEYNES
ENGLAND

File: 2550PSU.DGM