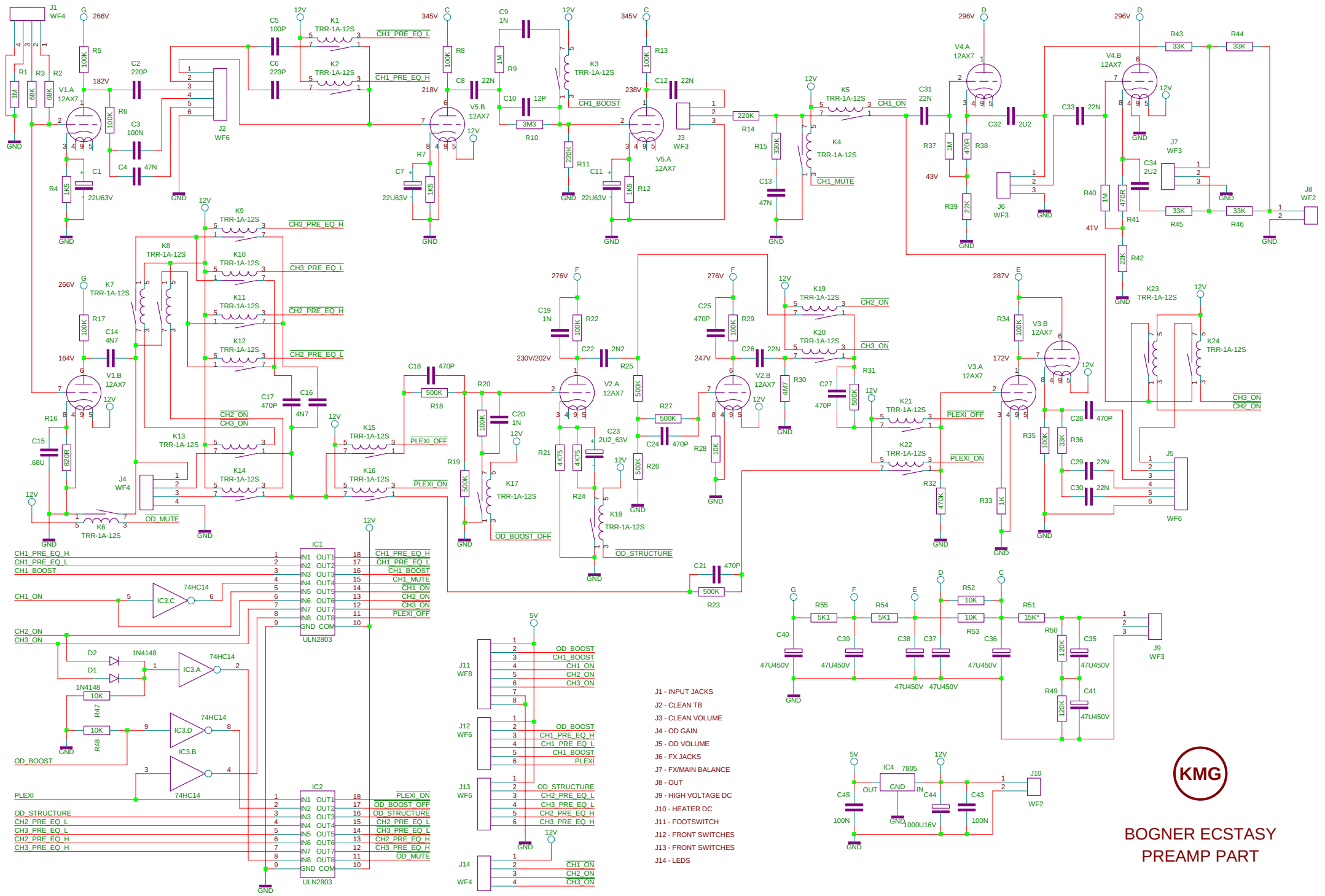
J1 - INPUT JACKS
J2 - CLEAN TB
J3 - CLEAN VOLUME
J4 - OD GAIN
J5 - OD VOLUME
J6 - FX JACKS
J7 - FX/MAIN BALANCE
J8 - OUT
J9 - HIGH VOLTAGE DC
J10 - HEATER DC
J11 - FOOTSWITCH
J12 - FRONT SWITCHES
J13 - FRONT SWITCHES
J14 - LEDS
KMG
BOGNER ECSTASY
PREAMP PART