REVISION RECORD			
REV	DESCRIPTION	BY	DATE

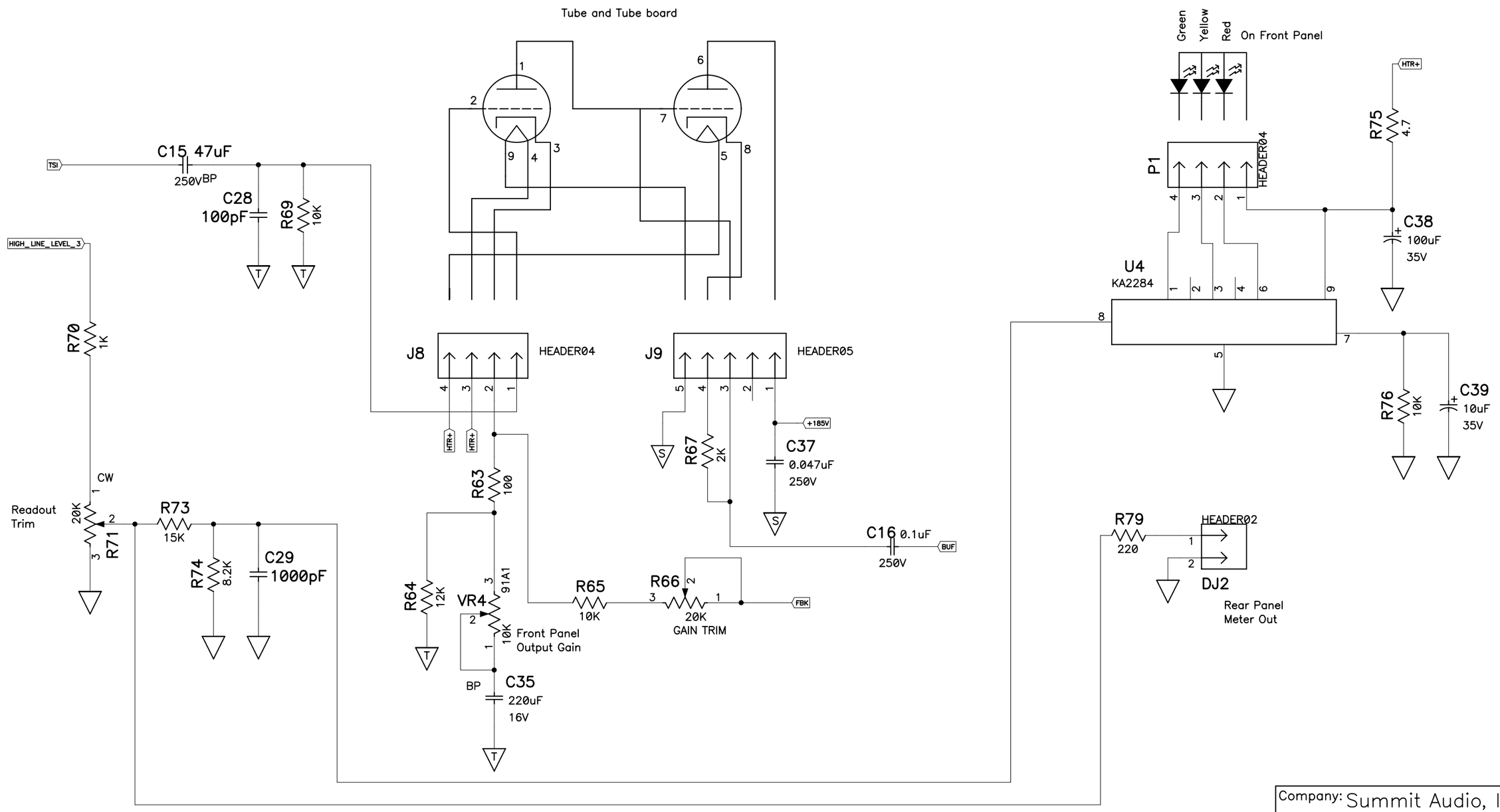

Company: Summit Audio, Inc.			
Title: 2BA – Main			
Size B	Part Number 100055-03	Rev:	Dwg Number	Rev:
Date: June 14, 2005	Engineer Drawn by rsb		
Filename main2BA.SCH	Sheet 3 of 6		