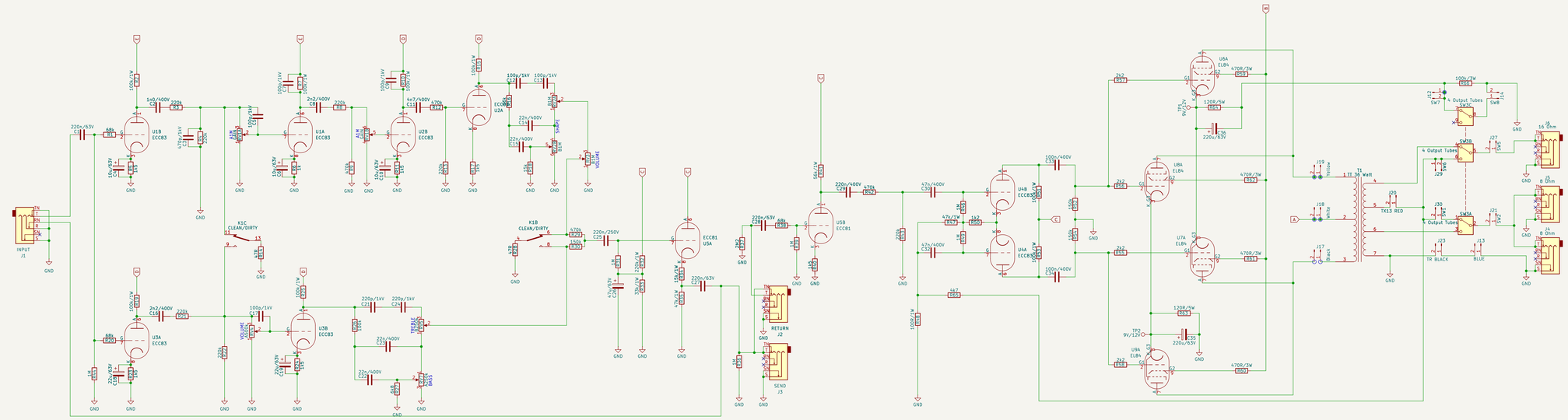
INPUT
J1
U1B
ECC83
U1A
ECC83
U2B
ECC83
U2A
ECC83
U3A
ECC83
U3B
ECC83
K1C
CLEAN/DIRTY
K1B
CLEAN/DIRTY
VOLUME
TREBLE
BASS
ECC81
U5A
U5B
ECC81
RETURN
J2
SEND
J3
U4B
ECC83
U4A
ECC83
U6A
EL84
U8A
EL84
U7A
EL84
U9A
EL84
T1
30 Watt
TX15 RED
TR BLACK
BLUE
4 Output Tubes
SW3A
SW3B
16 Ohm
8 Ohm
4 Ohm

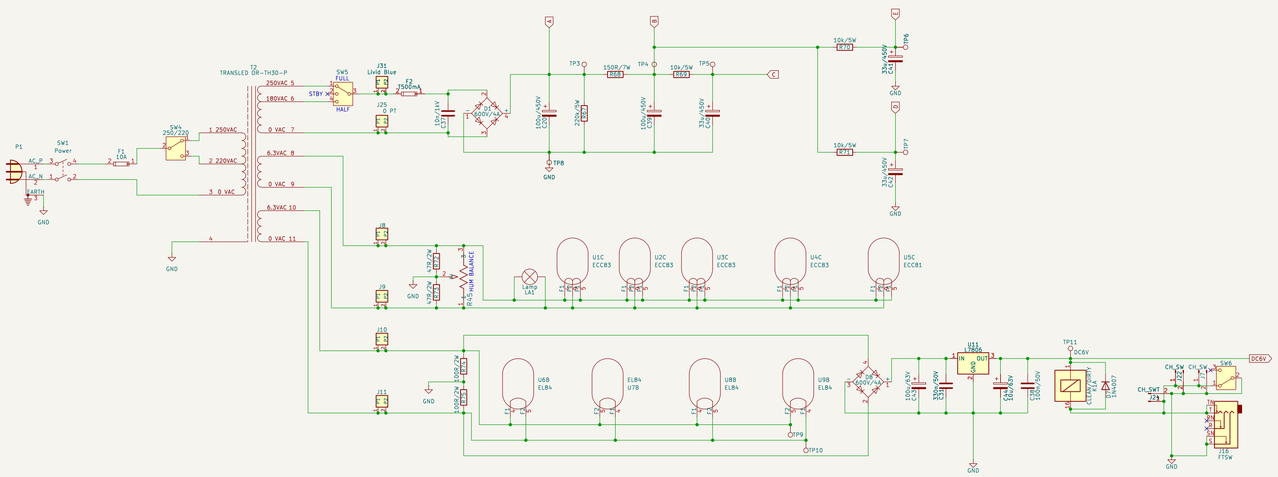
P1
SW1
Power
F1
10A
EN1
250/220
T2
TRANSLED OR-TH30-P
250VAC 5
180VAC 6
0 VAC 7
6.3VAC 8
0 VAC 9
6.3VAC 10
0 VAC 11
1 250VAC
2 220VAC
3 0 VAC
SW5
FULL
STBY
HALF
J31
LWd Blue
F2
2500mA
J25
0 PT
BR1
600V/4A
TP3
TP4
TP5
TP6
TP7
TP8
150R/7W
10k/5W
U1C
ECC83
U2C
ECC83
U3C
ECC83
U4C
ECC83
U5C
ECC81
U6B
EL84
U7B
EL84
U8B
EL84
U9B
EL84
TP9
TP10
U11
LM2596
TP11
DC6V
D1
1N4007
SW6
J10
FTSW
CH_SW
CH_SW2
22k