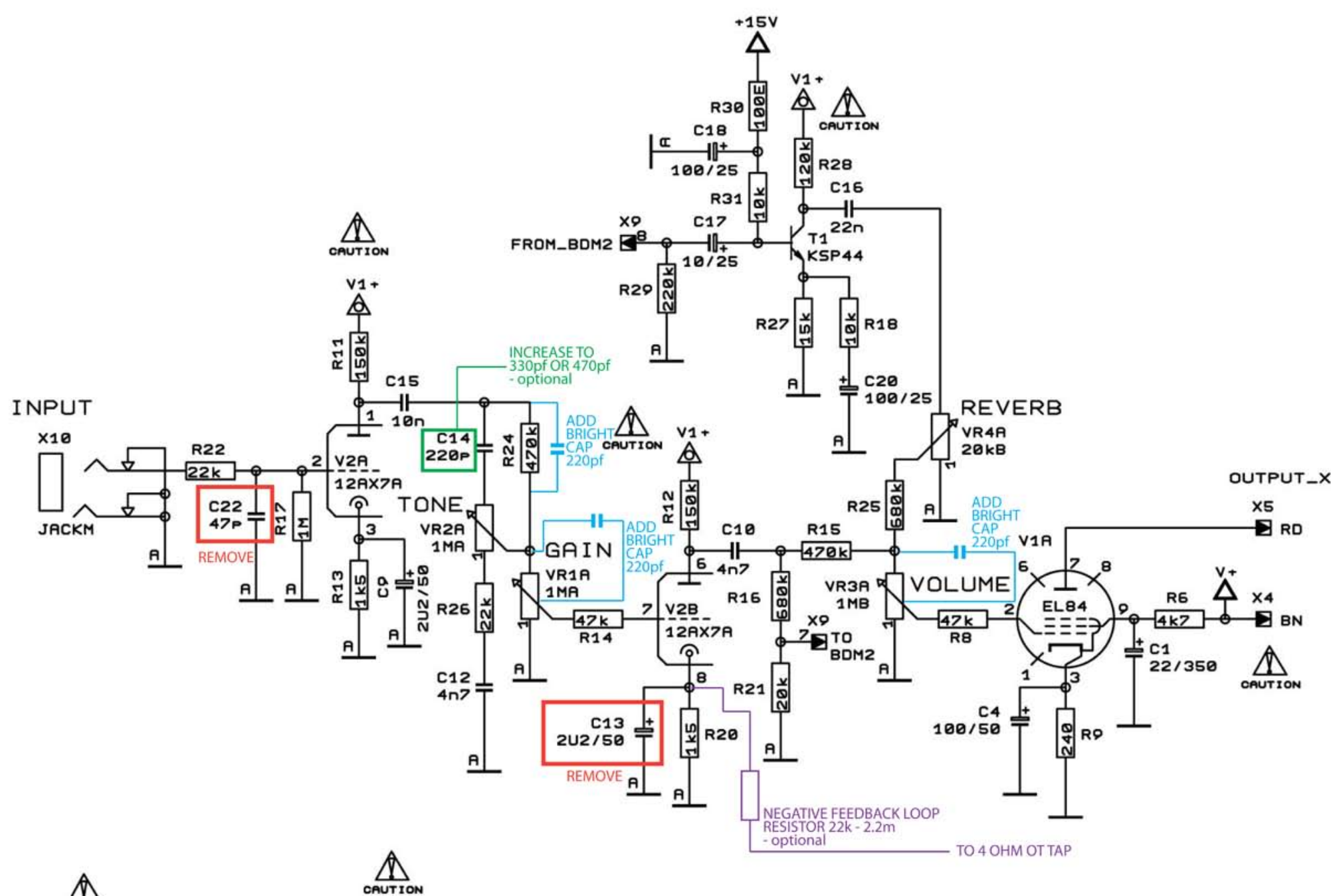
+15V
V1+
R30
100E
C18
100/25
R31
10k
R28
120k
C16
22n
X9
FROM_BDM2
C17
10/25
T1
KSP44
R29
220k
R27
15k
R18
10k
C20
100/25
CAUTION
INPUT
X10
JACKM
R22
22k
C22
47p
REMOVE
R17
1M
R13
1k5
C9
2U2/50
R11
150k
C15
10n
V2A
12AX7A
C14
220p
INCREASE TO
330pf OR 470pf
- optional
R24
470k
ADD
BRIGHT
CAP
220pf
TONE
VR2A
1MA
R26
22k
C12
4n7
GAIN
VR1A
1MA
47k
R14
V2B
12AX7A
C13
2U2/50
REMOVE
R12
150k
C10
4n7
R16
680k
R21
20k
R20
1k5
X9
TO
BDM2
R15
470k
R25
680k
REVERB
VR4A
20kB
VR3A
1MB
VOLUME
47k
R8
V1A
EL84
R6
4k7
C1
22/350
C4
100/50
R9
240
OUTPUT_X
X5
RD
X4
BN
NEGATIVE FEEDBACK LOOP
RESISTOR 22k - 2.2m
- optional
TO 4 OHM OT TAP