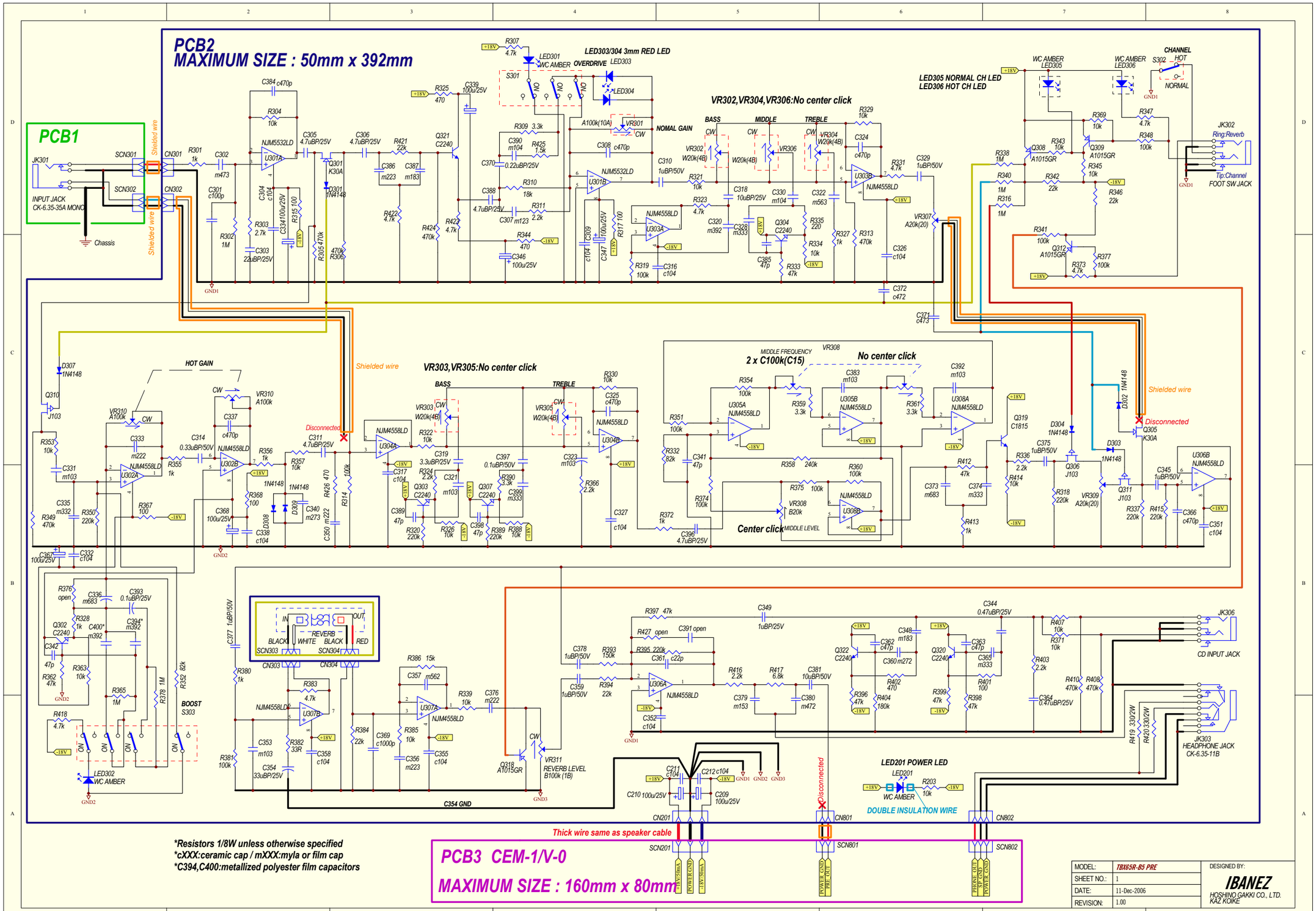


*Resistors 1/8W unless otherwise specified
*cXXX:ceramic cap / mXXX:myla or film cap
*C394,C400:metallized polyester film capacitors

| | |
|---|---|
| MODEL: | TBX65R-B5 PRE |
| SHEET NO.: | 1 |
| DATE: | 11-Dec-2006 |
| REVISION: | 1.00 |

DESIGNED BY:
IBANEZ
HOSHINO GAKKI CO., LTD.
KAZ KOIKE