LAST REFNUM USED: R176 C167 CR54 J173 V6 Q11 VR16

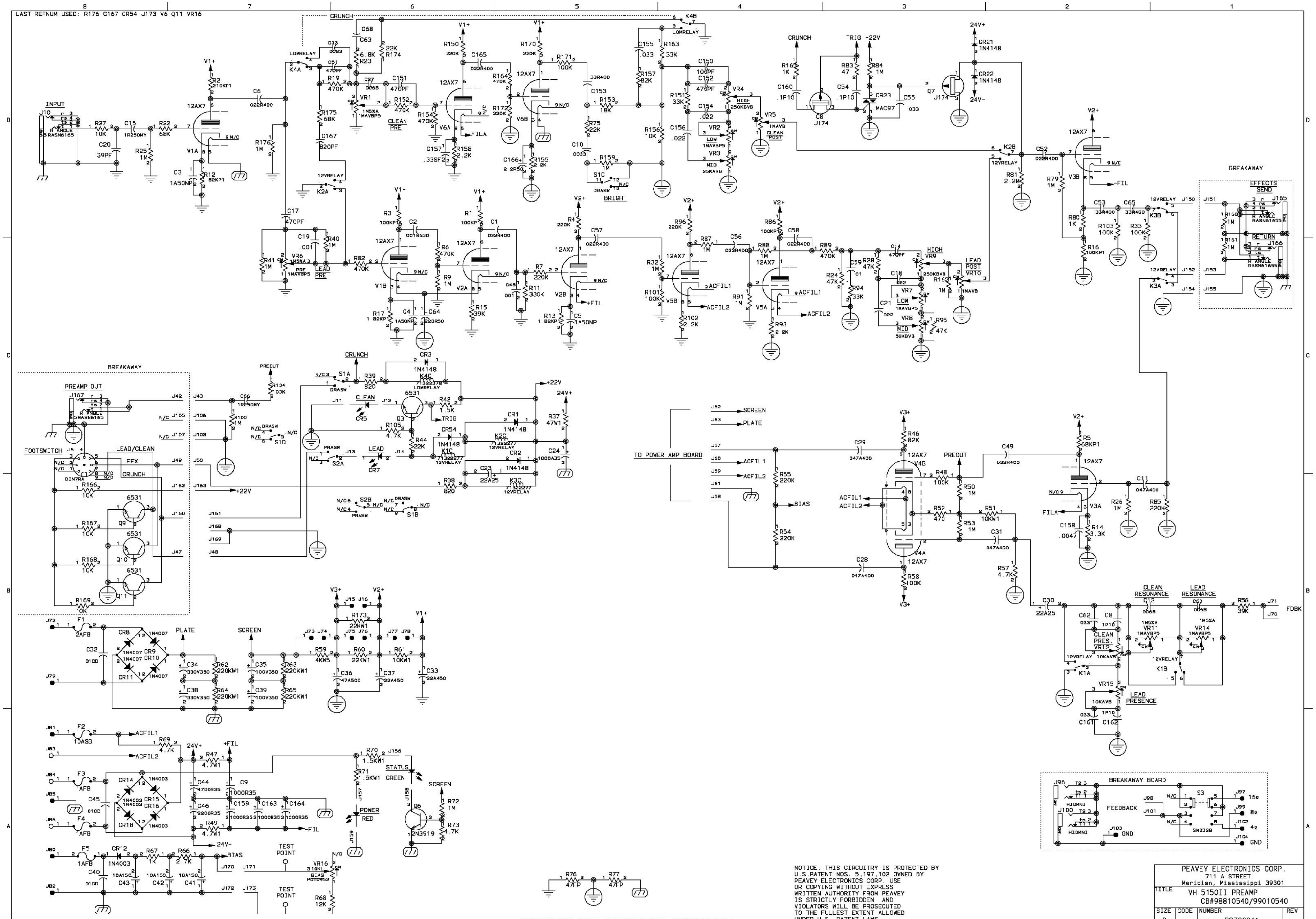
INPUT
CRUNCH
CLEAN PRE
BRIGHT
LEAD PRE
CLEAN POST
LEAD POST
HIGH
LOW
MID
TRIG
BREAKAWAY
EFFECTS SEND
RETURN
PREAMP OUT
FOOTSWITCH
LEAD/CLEAN
EFX
TO POWER AMP BOARD
SCREEN
PLATE
PREOUT
BIAS
CLEAN RESONANCE
LEAD RESONANCE
CLEAN PRES.
LEAD PRESENCE
FDBK
STATUS GREEN
POWER RED
TEST POINT
BREAKAWAY BOARD
FEEDBACK
GND
12AX7
+22V
24V+
24V-
V1+
V2+
V3+
+FIL
-FIL
ACFIL1
ACFIL2

NOTICE: THIS CIRCUITRY IS PROTECTED BY
U.S.PATENT NOS. 5,197,102 OWNED BY
PEAVEY ELECTRONICS CORP. USE
OR COPYING WITHOUT EXPRESS
WRITTEN AUTHORITY FROM PEAVEY
IS STRICTLY FORBIDDEN AND
VIOLATORS WILL BE PROSECUTED
TO THE FULLEST EXTENT ALLOWED
UNDER U.S. PATENT LAWS.

COPYRIGHT 2001 PEAVEY ELECTRONICS CORP. PRINTED IN U.S.A.

PEAVEY ELECTRONICS CORP.
711 A STREET
Meridian, Mississippi 39301

TITLE	VH 5150II PREAMP CB#98810540/99010540

SIZE	CODE	NUMBER	REV
D		P9700041	

PRINT DATE FEB-16-2001 SHEET 1 OF 1

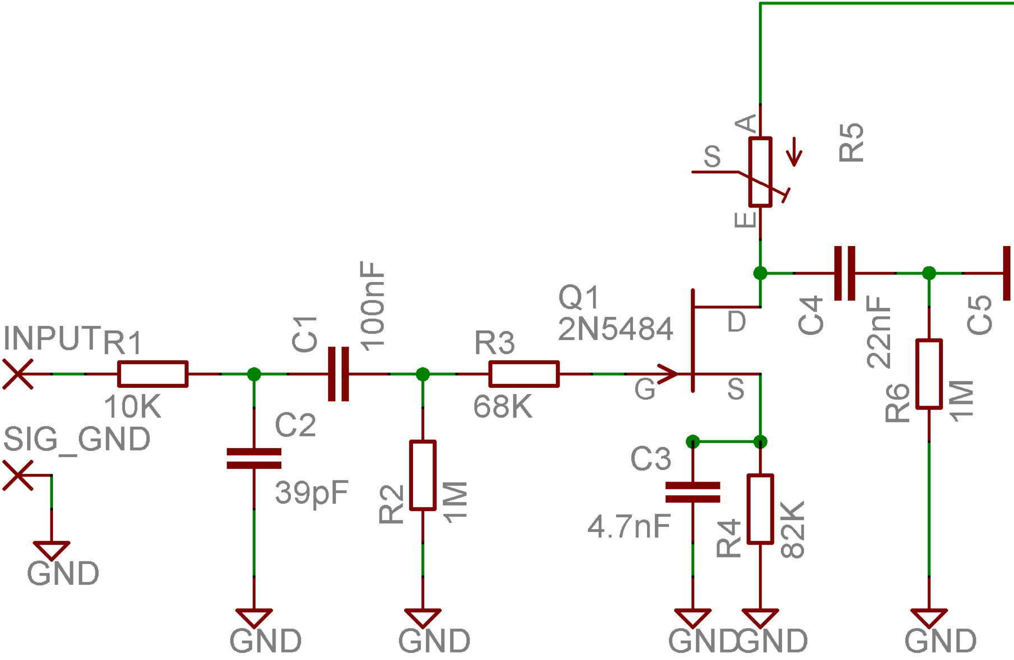
INPUT
R1
10K
SIG_GND
GND
C2
39pF
GND
C1
100nF
R2
1M
GND
R3
68K
Q1
2N5484
G
D
S
C3
4.7nF
GND
R4
82K
GND
A
S
E
R5
C4
22nF
R6
1M
GND
C5

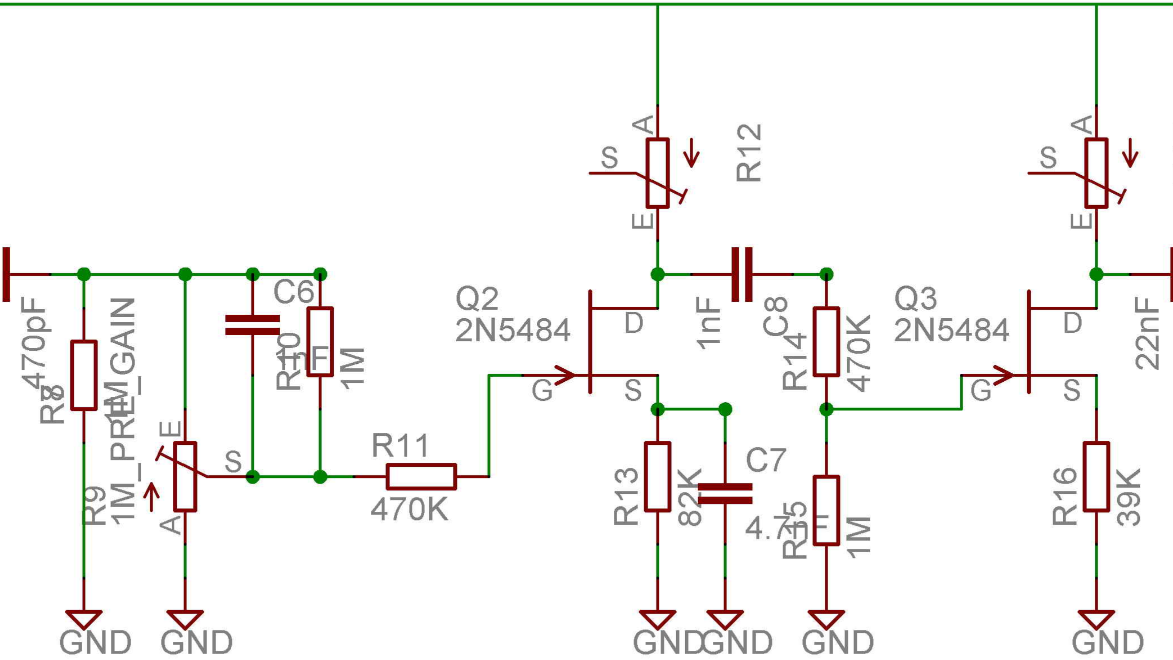
470pF
R8
R9
1M_PRE_GAIN
E
S
A
C6
1nF
R10
1M
R11
470K
Q2
2N5484
D
G
S
A
S
E
R12
1nF
C8
R13
82K
C7
4.7
R14
470K
R15
1M
Q3
2N5484
D
G
S
A
S
E
22nF
R16
39K
GND
GND
GND
GND
GND
GND

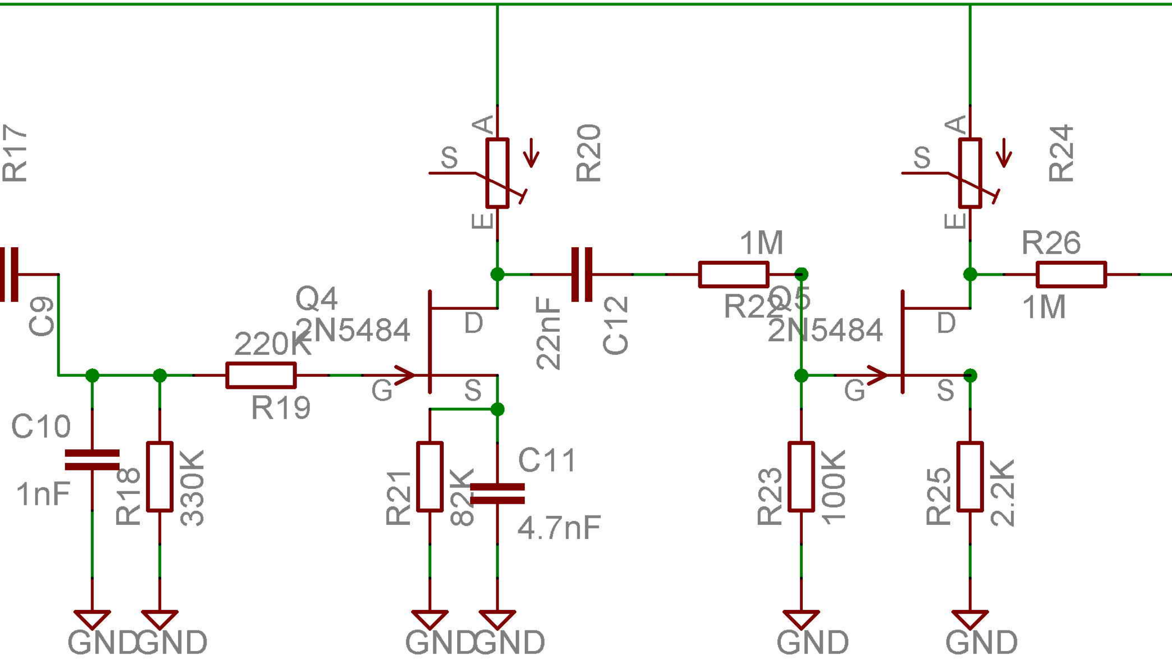
R17
C9
A
S
E
R20
A
S
E
R24
1M
R26
Q4
2N5484
D
22nF
C12
R22
Q5
2N5484
D
1M
220K
R19
G
S
G
S
C10
1nF
R18
330K
R21
82K
C11
4.7nF
R23
100K
R25
2.2K
GND
GND
GND
GND
GND
GND

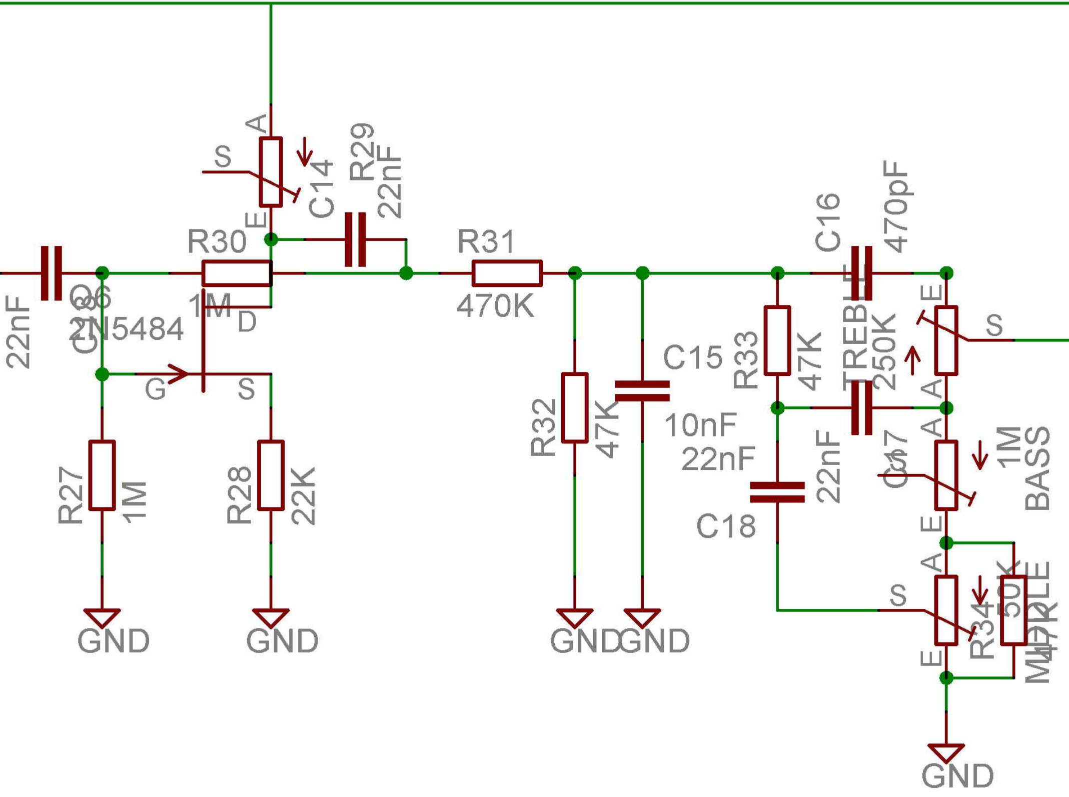

A
S
E
C14
R29
22nF
R30
1M
Q6
2N5484
D
G
S
C13
22nF
R27
1M
R28
22K
GND
GND
R31
470K
R32
47K
GND
GND
C15
10nF
R33
47K
22nF
C18
C16
470pF
TREBLE
250K
E
S
A
A
C17
22nF
1M
BASS
E
A
S
E
R34
47K
50K
MIDDLE
GND

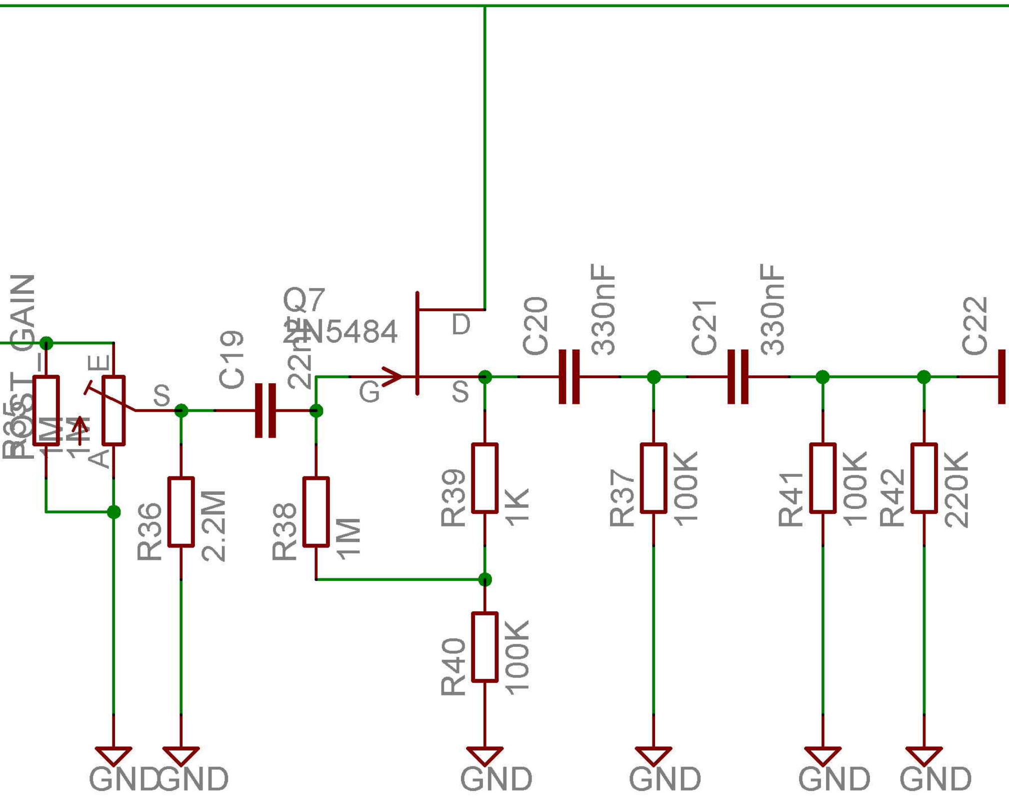
BOOST_GAIN
R35
1M
POT
1M
E
A
S
C19
22nF
Q7
2N5484
D
G
S
C20
330nF
C21
330nF
C22
R36
2.2M
R38
1M
R39
1K
R40
100K
R37
100K
R41
100K
R42
220K
GND
GND
GND
GND
GND
GND

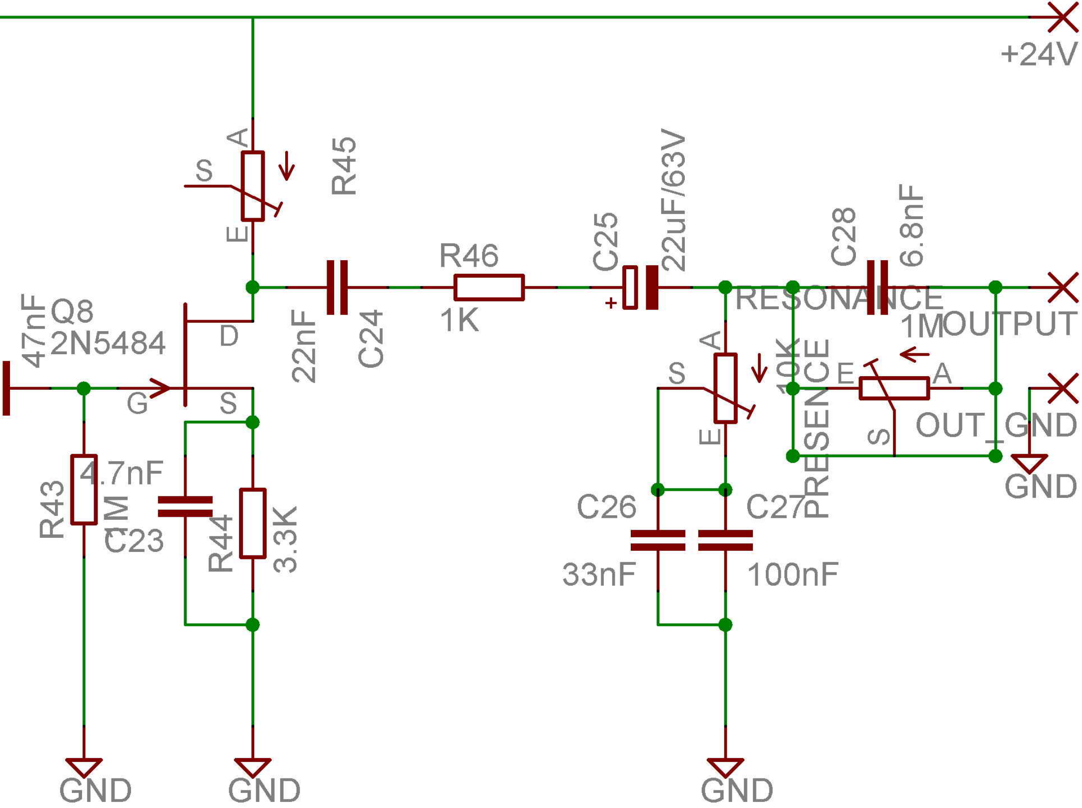
+24V
R45
A
S
E
C24
22nF
R46
1K
C25
22uF/63V
+
C28
6.8nF
RESONANCE
1M
OUTPUT
Q8
2N5484
47nF
D
G
S
A
S
E
10K
PRESENCE
E
A
S
OUT_GND
GND
R43
1M
4.7nF
C23
R44
3.3K
C26
33nF
C27
100nF
GND
GND
GND